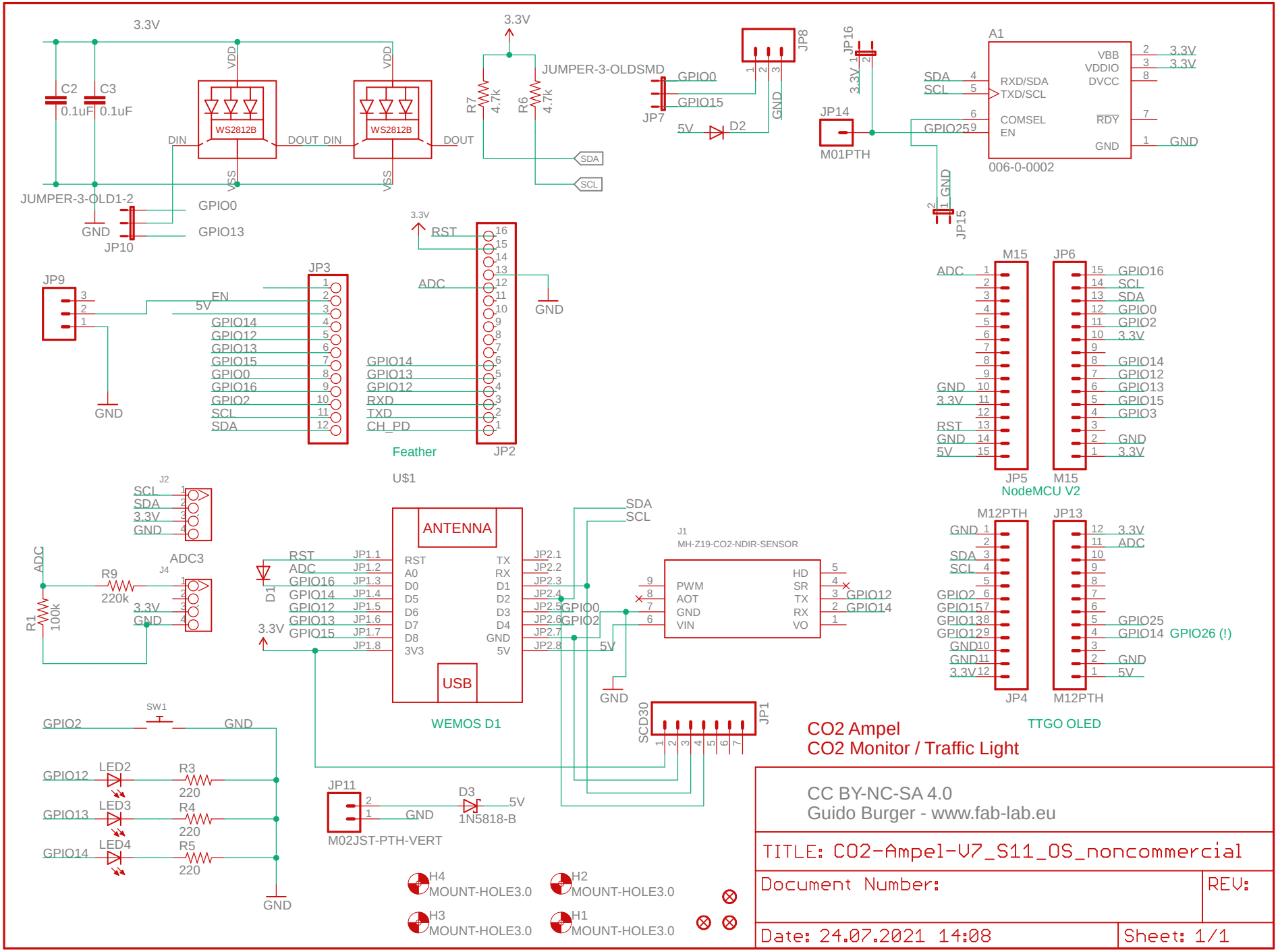
3.3V
C2
0.1uF
C3
0.1uF
VDD
WS2812B
DIN
DOUT
VSS
JUMPER-3-OLD1-2
GND
GPIO0
GPIO13
JP10
JUMPER-3-OLDSMD
R7
4.7k
R6
4.7k
SDA
SCL
JP7
GPIO0
GPIO15
5V
D2
JP8
GND
JP16
JP14
M01PTH
A1
RXD/SDA
TXD/SCL
COMSEL
EN
VBB
VDDIO
DVCC
RDY
006-0-0002
JP15
JP9
EN
5V
GPIO14
GPIO12
GPIO13
GPIO15
GPIO0
GPIO16
GPIO2
SCL
SDA
JP3
RST
ADC
RXD
TXD
CH_PD
Feather
JP2
U$1
M15
JP6
JP5
NodeMCU V2
J2
J4
ADC3
R9
220k
R1
100k
ANTENNA
USB
RST
A0
D0
D5
D6
D7
D8
3V3
TX
RX
D1
D2
D3
D4
GND
5V
WEMOS D1
D1
J1
MH-Z19-CO2-NDIR-SENSOR
PWM
AOT
VIN
HD
SR
VO
SCD30
JP1
M12PTH
JP13
JP4
TTGO OLED
GPIO26 (!)
SW1
LED2
LED3
LED4
R3
R4
R5
220
JP11
M02JST-PTH-VERT
D3
1N5818-B
H4
MOUNT-HOLE3.0
H2
MOUNT-HOLE3.0
H3
MOUNT-HOLE3.0
H1
MOUNT-HOLE3.0
CO2 Ampel
CO2 Monitor / Traffic Light
CC BY-NC-SA 4.0
Guido Burger - www.fab-lab.eu
TITLE: CO2-Ampel-V7_S11_OS_noncommercial
Document Number:
REV:
Date: 24.07.2021 14:08
Sheet: 1/1